Purpose: The PROC011B Altium design, has a VARIANT002 for IWR1642 use. It is based on the AWR1642BOOST revA modified to add SPI multiplexing for CanFD. This modification allows the IWR1642 CAN (which is supported) to be connected to the same CanFD transceiver.

CAN - xWr1642 BOOST RevB schematic

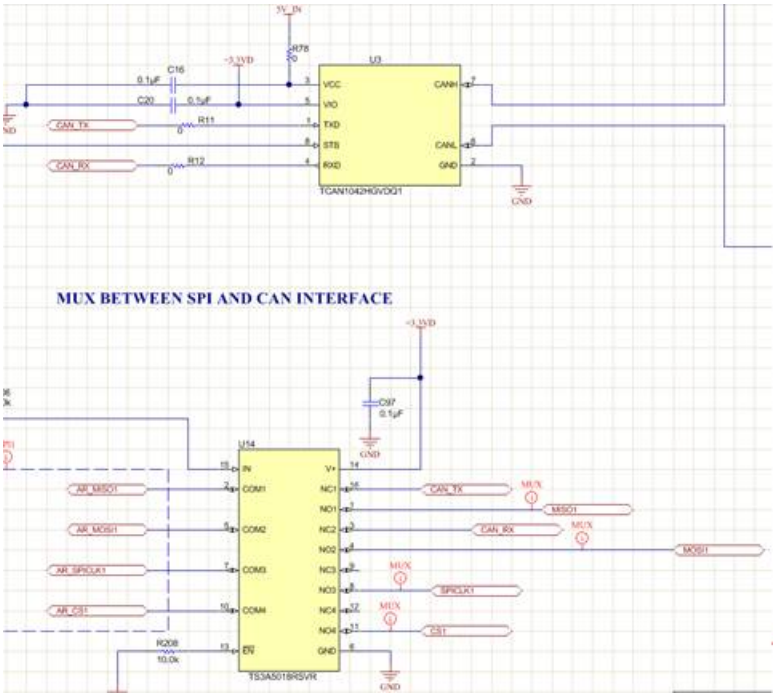

Blue wire Solution to existing RevB xWR1642 EVM

Can Tx - Remove R11

Connect a wire from R11/U3-1 resistor pad to U14-12

Can Rx - Remove R12

Connect a wire from R12/U3-4 resistor pad to U14-9

Note: U14 mux is still used for Can in this wiring modification.